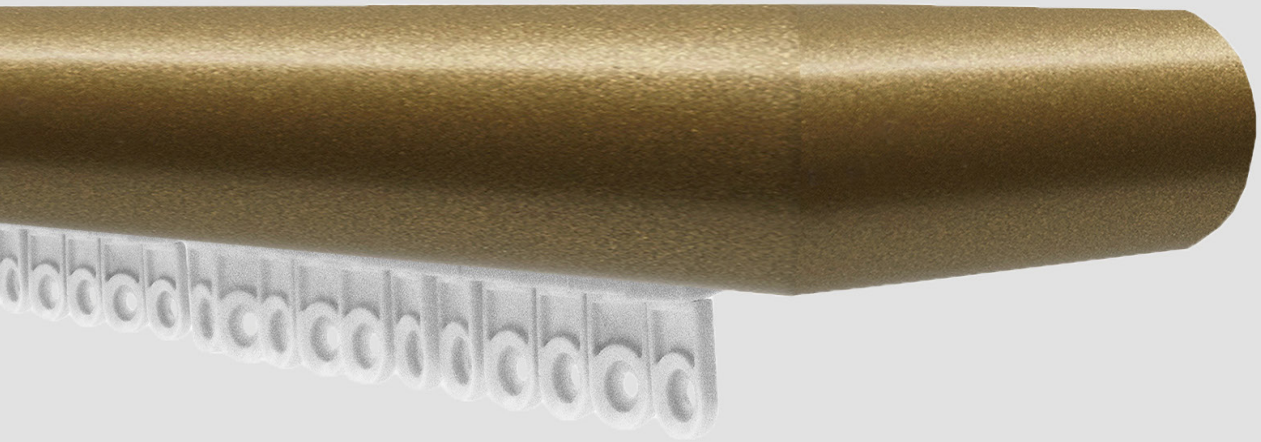

MITERED

TRAVERSE ROD

CROWN

T 601.924.0669
TF 866.922.7056 F 601.460.4736
CROWNROD.COM

RETURN

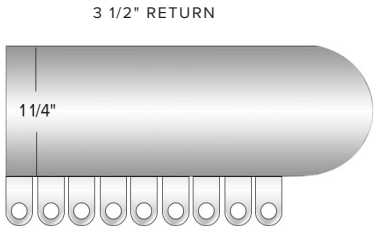

SLIDE

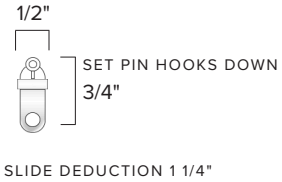

BRACKET

A.

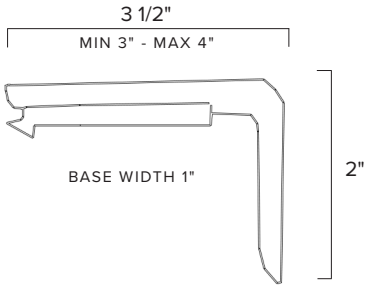

B.

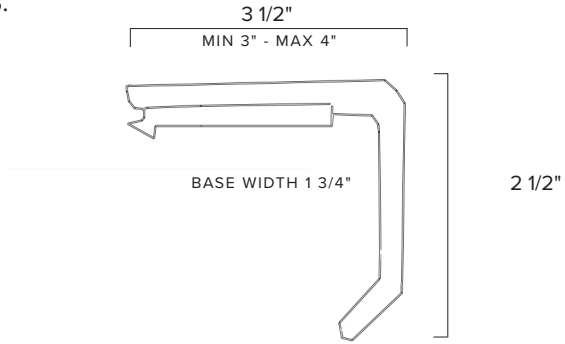

C.

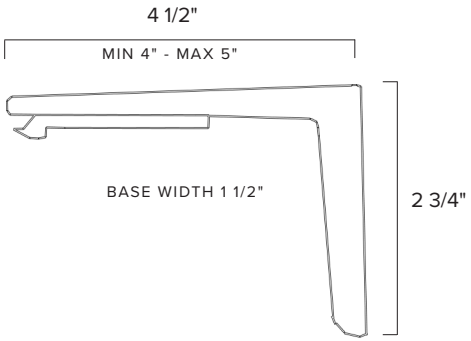

D.

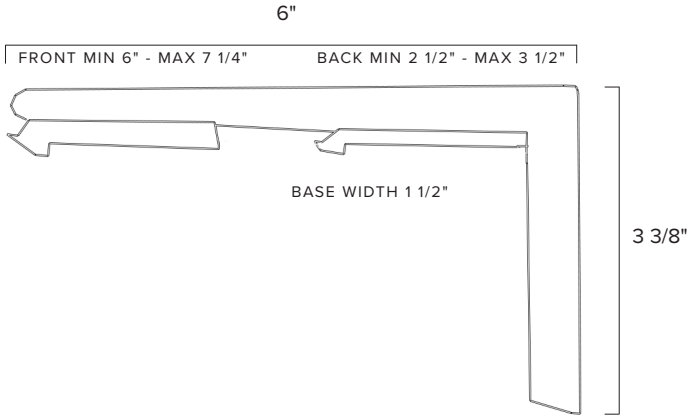

MITERED

TRAVERSE ROD

BRACKET

A. STANDARD CENTER

B. STANDARD END

C. HEAVY DUTY

D. DOUBLE / DEEP PROJECTION

FINISHES

SHOWN IN VINTAGE GOLD - ALSO AVAILABLE IN CLASSIC, MATTE, AND ARTISAN FINISHES

CROWN

T 601.924.0669
TF 866.922.7056 F 601.460.4736
CROWNROD.COM